MS201 x 6

MS168 x 4

MS176 x 2

29201113 x 2

PS023 x 4

(1:1)

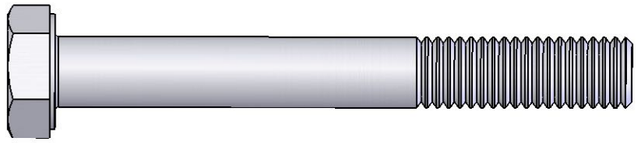

FB003 (M8 x 65) x 12

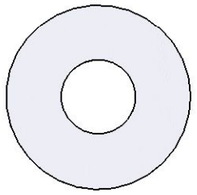

FW002 (M8) x 30

FN006 (M8) x 18

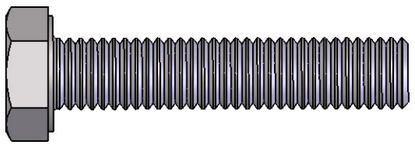

FS035 (M8 x 40) x 2

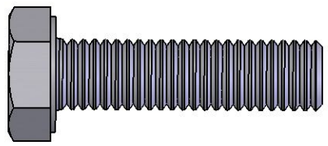

FB006 (M8 x 30) x 4

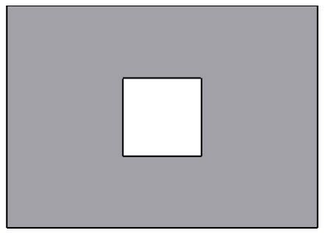

MS209 x 6

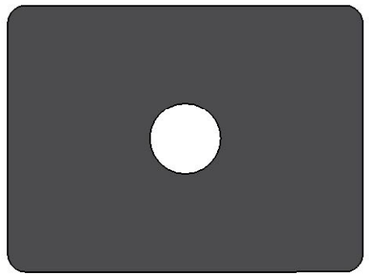

PS020 x 6

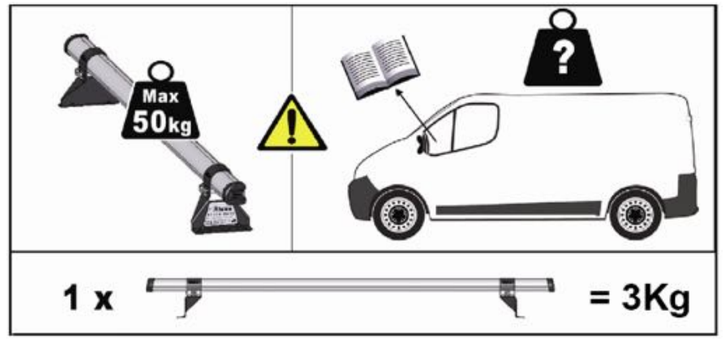

13mm x 2

1.

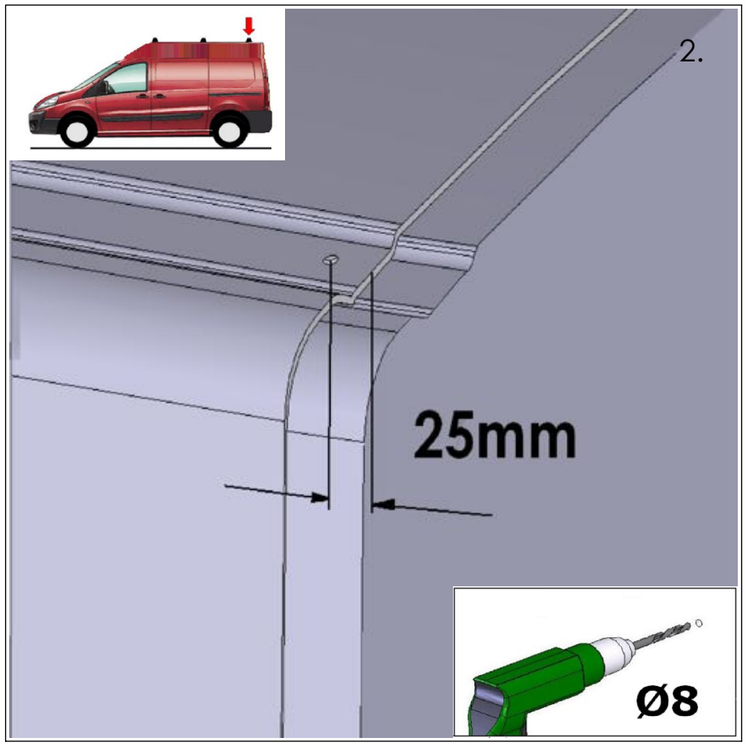
2.
25mm
Ø8

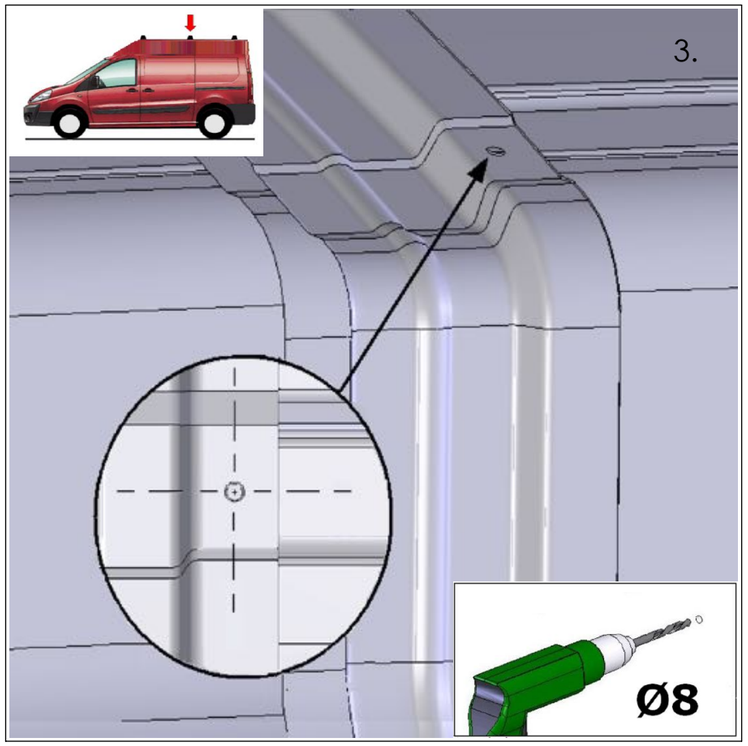
3.
Ø8

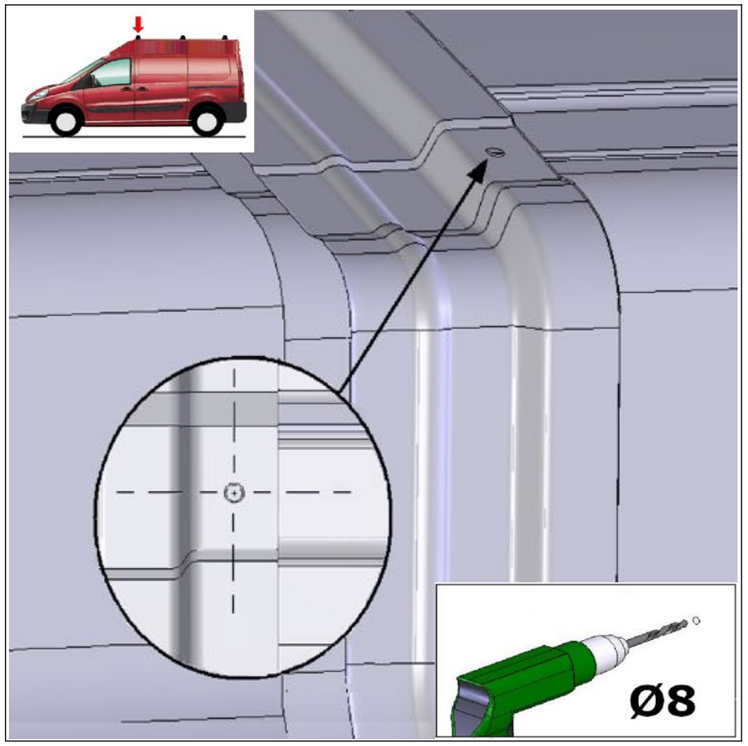
Ø8

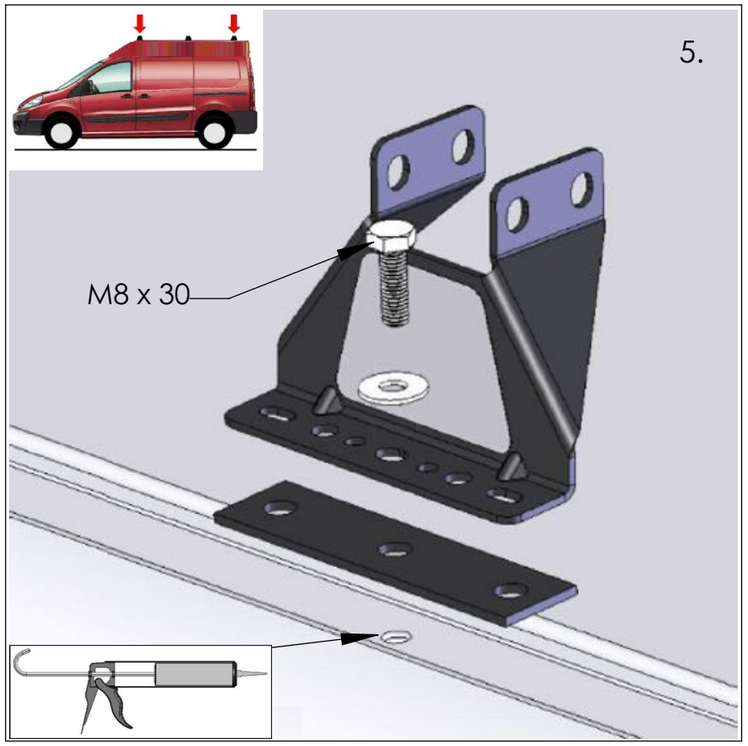
5.
M8 x 30

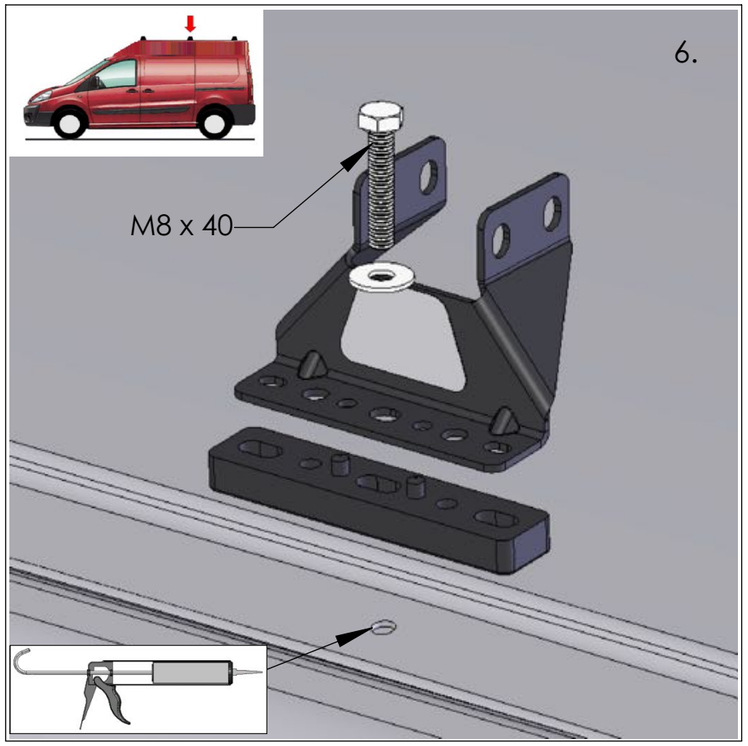
6.
M8 x 40

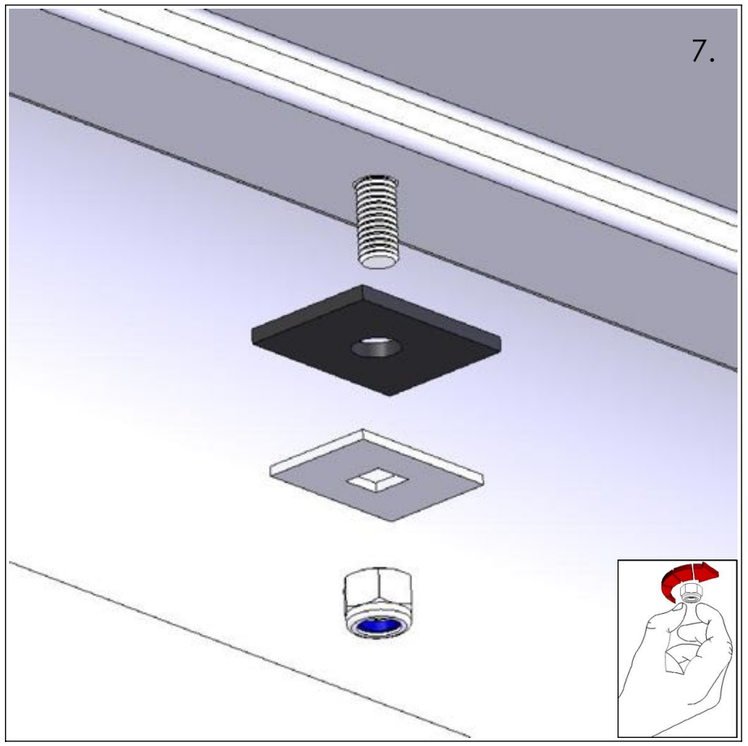
7.

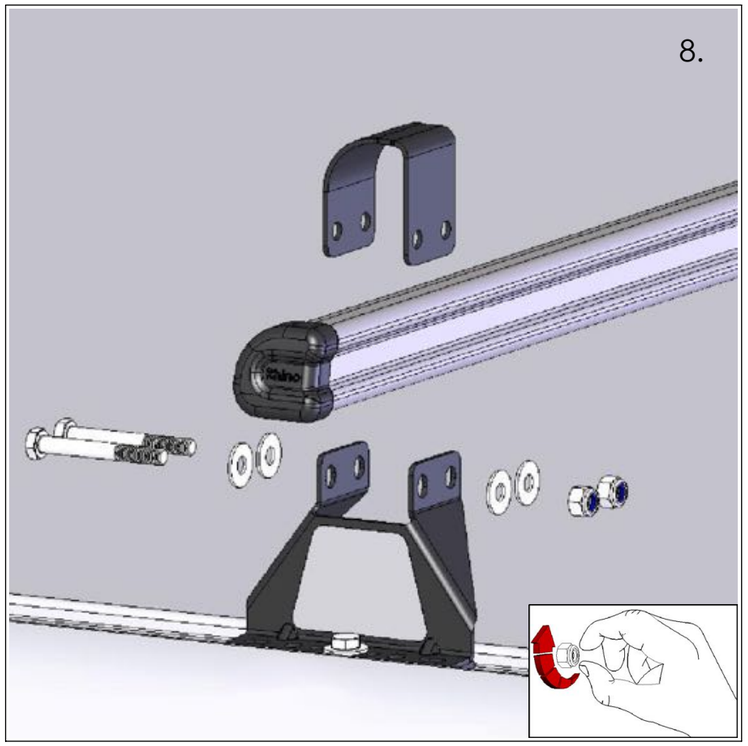
8.

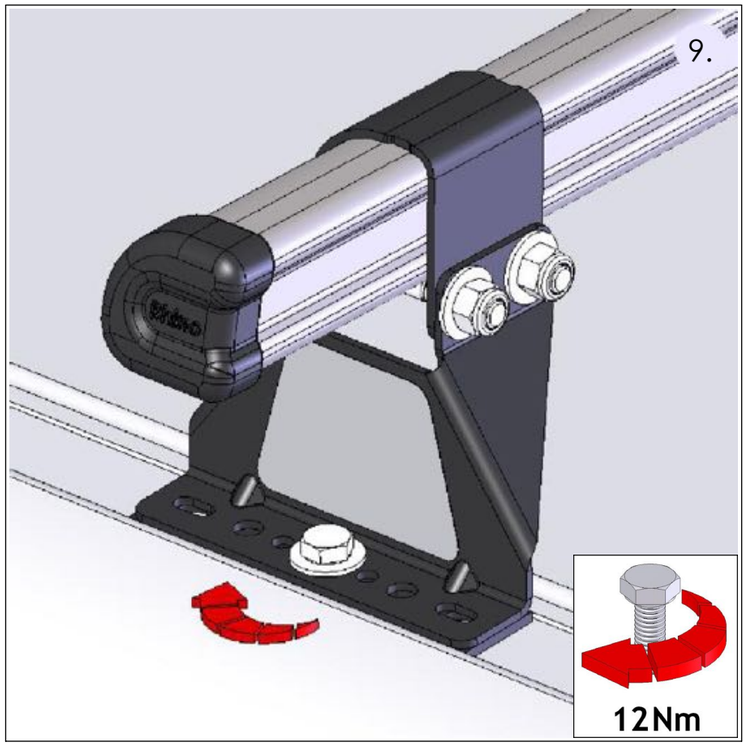
9.
12Nm

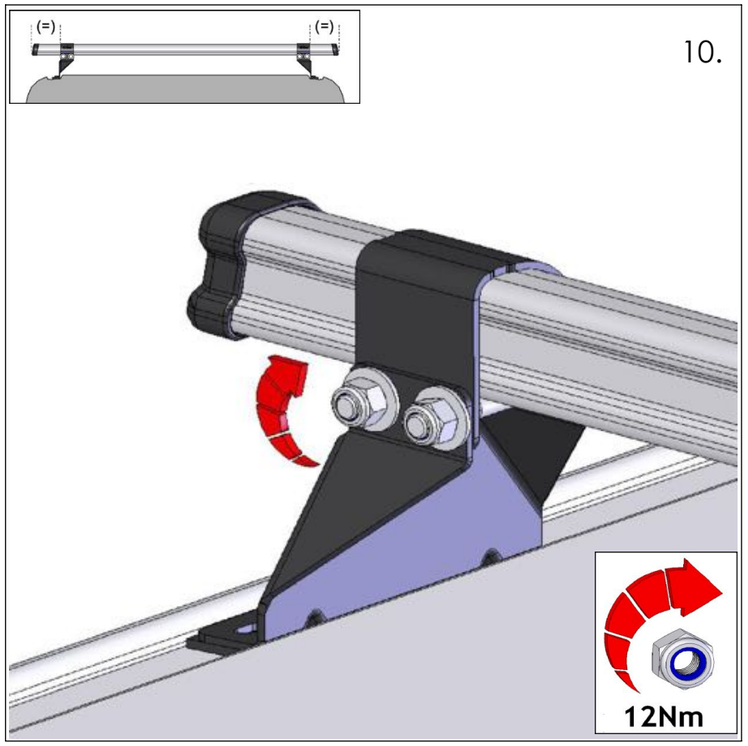
10.
(=)
(=)
12Nm

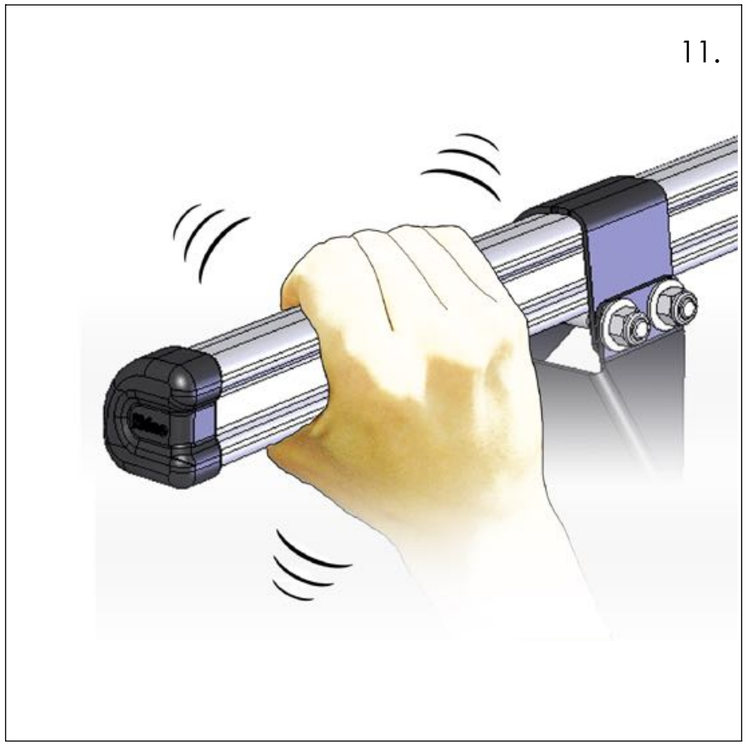
11.