A629

Vivaro/Traffic/Primastar 2014-
L1, H1, TWIN DOORS

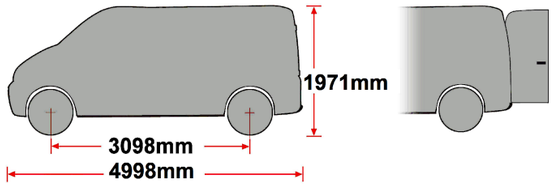

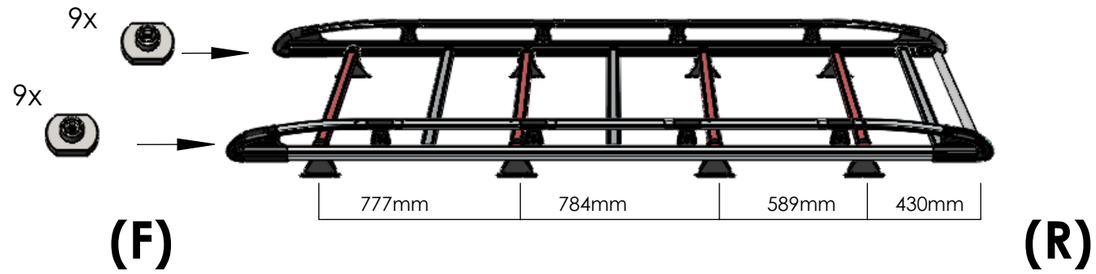

A630

Vivaro/Traffic/Primastar 2014-
L1, H1, TAILGATE

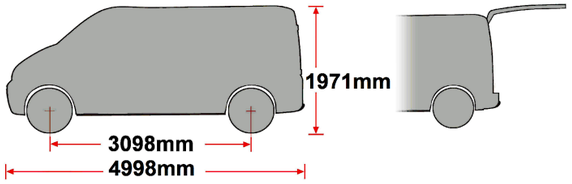

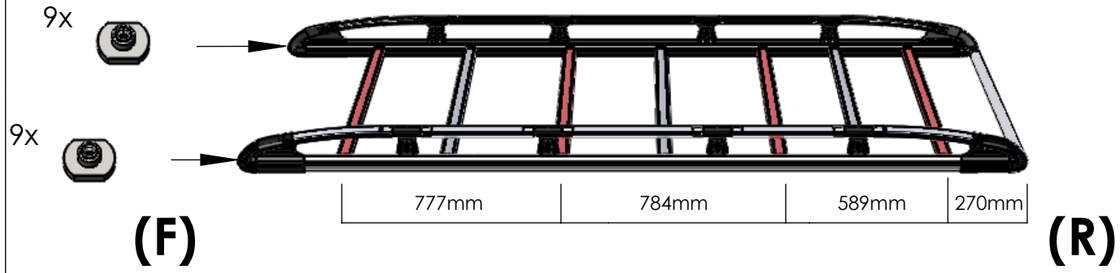

A631

Vivaro/Traffic/Primastar 2014-
L2, H1, TWIN DOORS

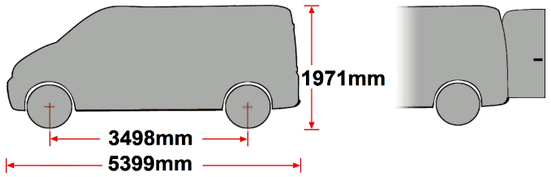

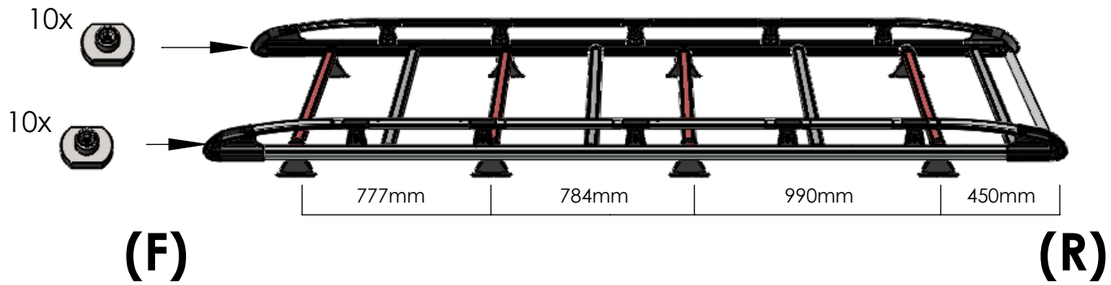

A632

Vivaro/Traffic/Primastar 2014-
L2, H1, TAILGATE

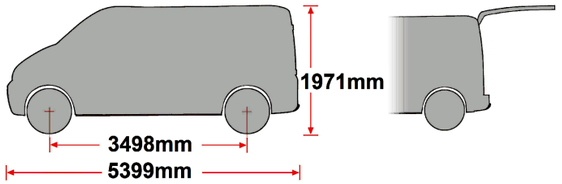

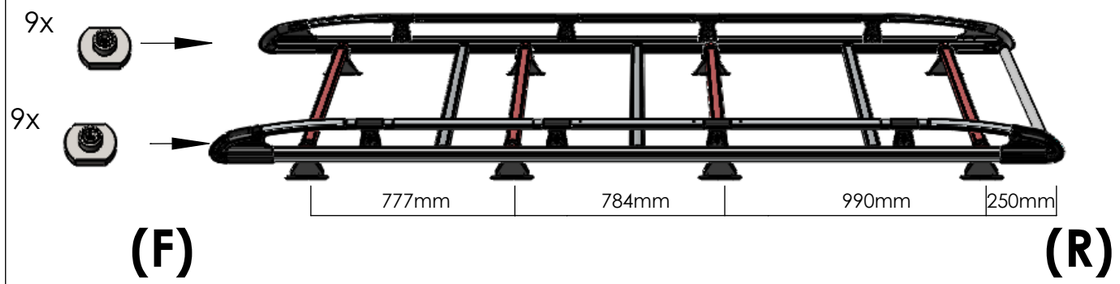

(1:1)

EXT09-004 x 8

MS417 x 8

PS095 x 8

PS089 x 1

PS090 x 1

PS210 x 8

FB003 (M8 x 65) x 16

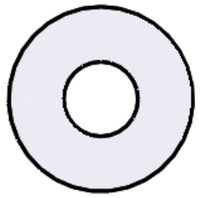

FW002 (M8) x 32

FN006 (M8) x 16

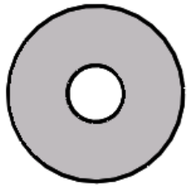

FW011(M6) x 16

PS208 (M6) x 16

FS038 (M6 x 25) x 16

FS059 (M8 x 25) x 20

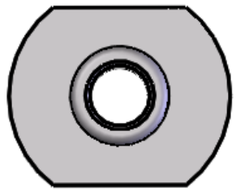

FN023 (M8) x 20

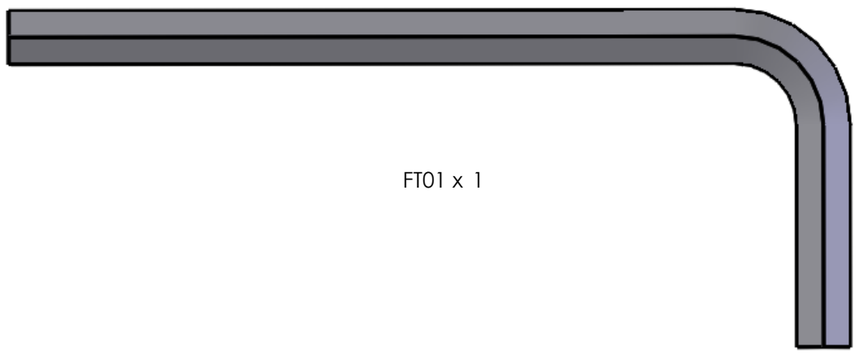

FT01 x 1

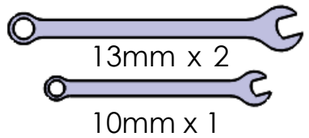

13mm x 2

10mm x 1

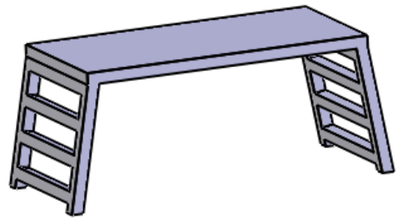

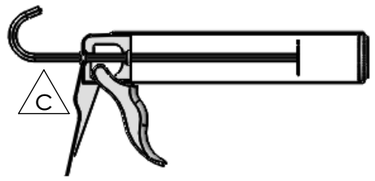

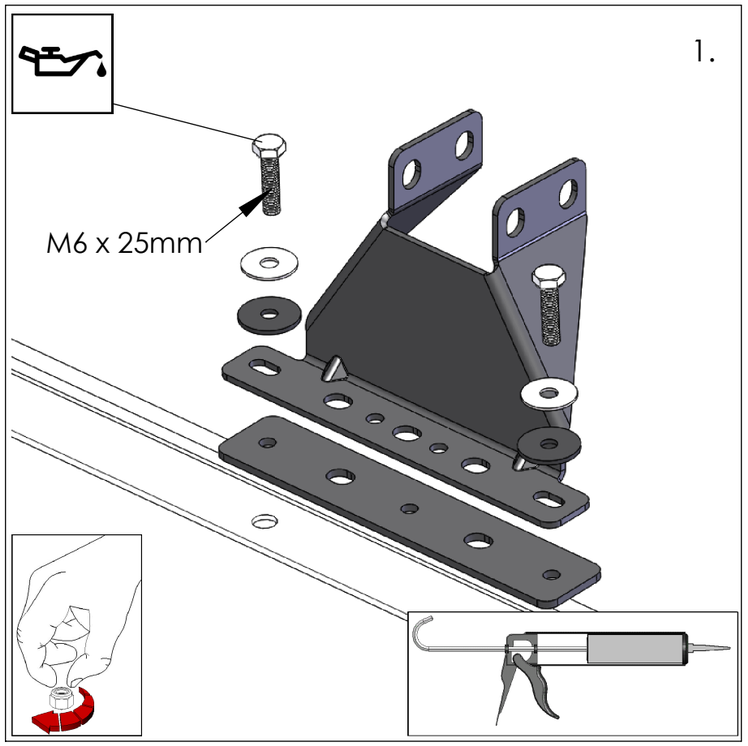
1.
M6 x 25mm

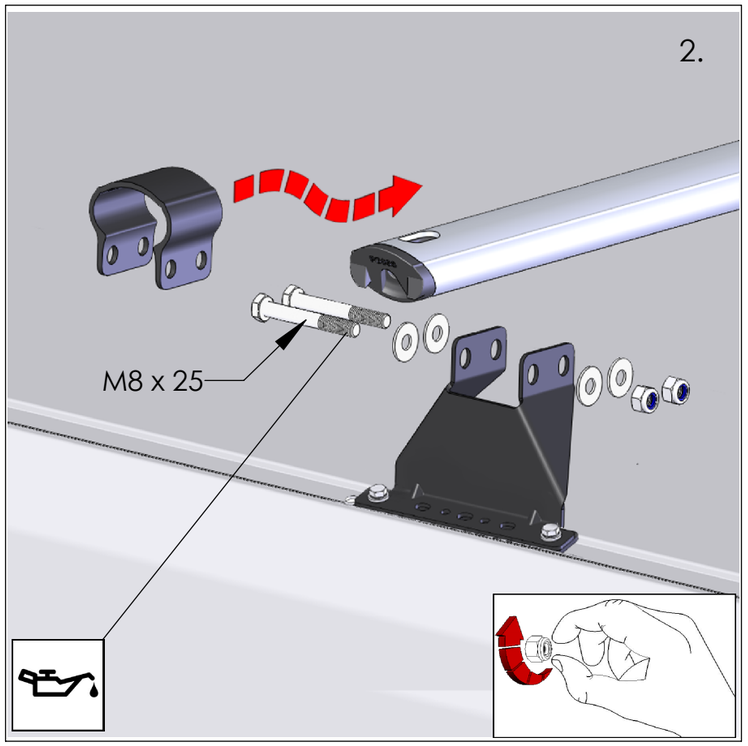
2.
M8 x 25

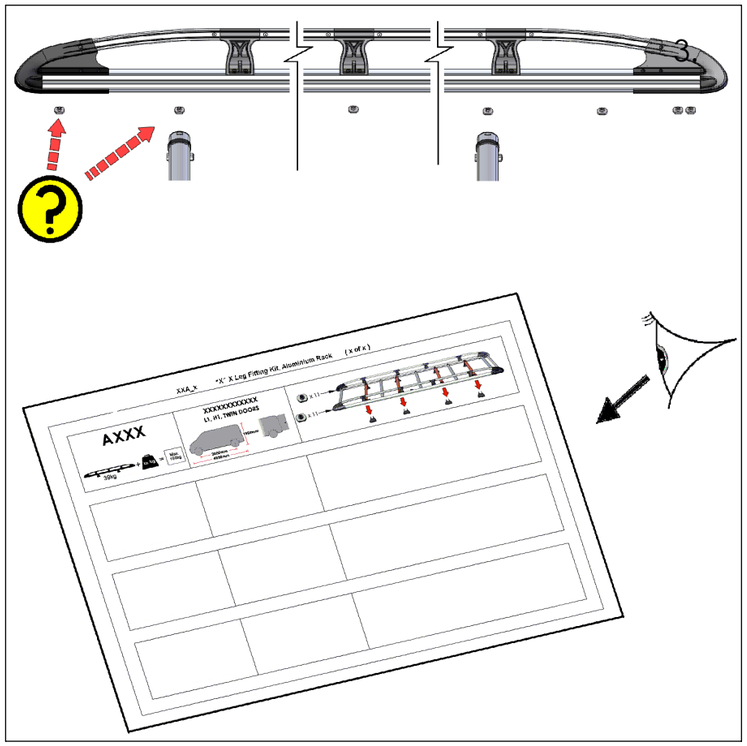
3.
AXXX

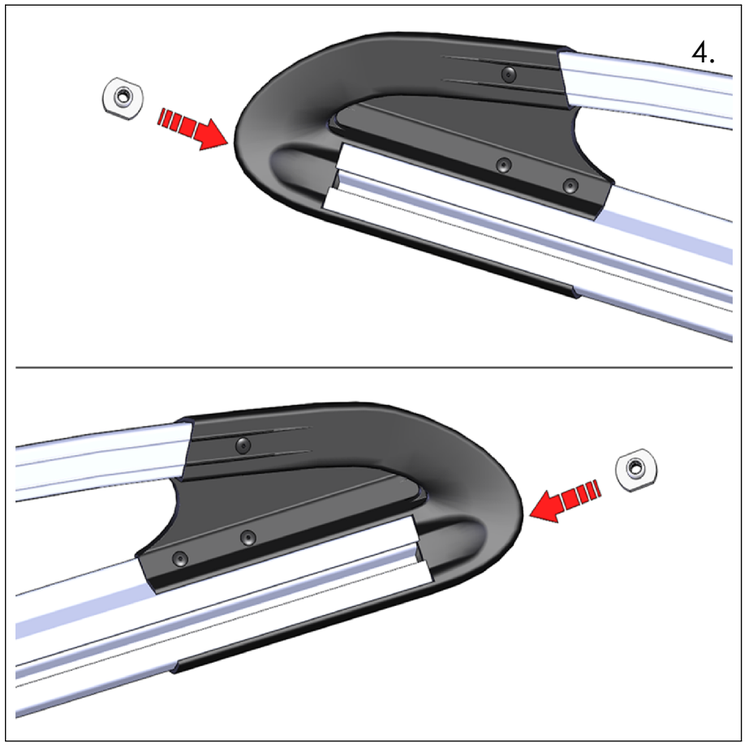
4.

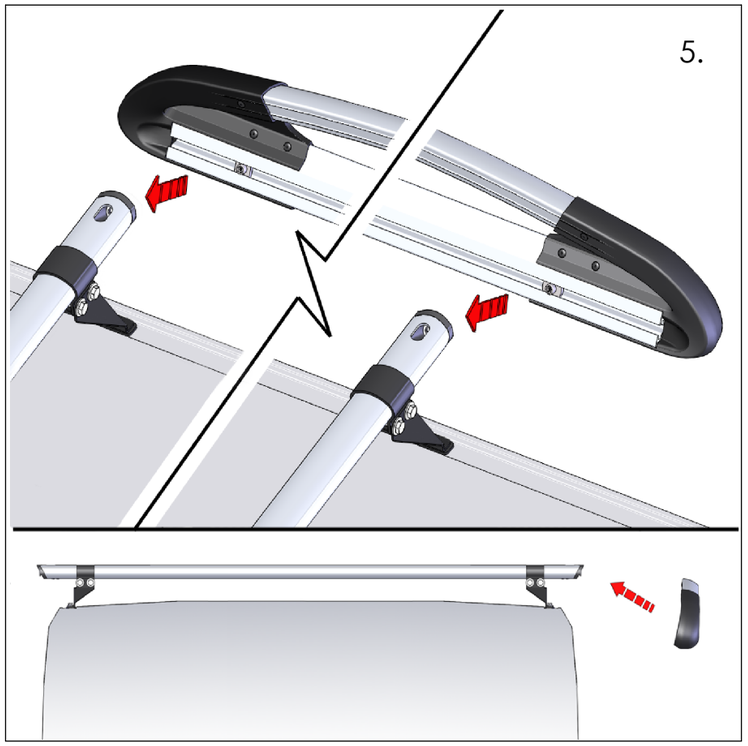
5.

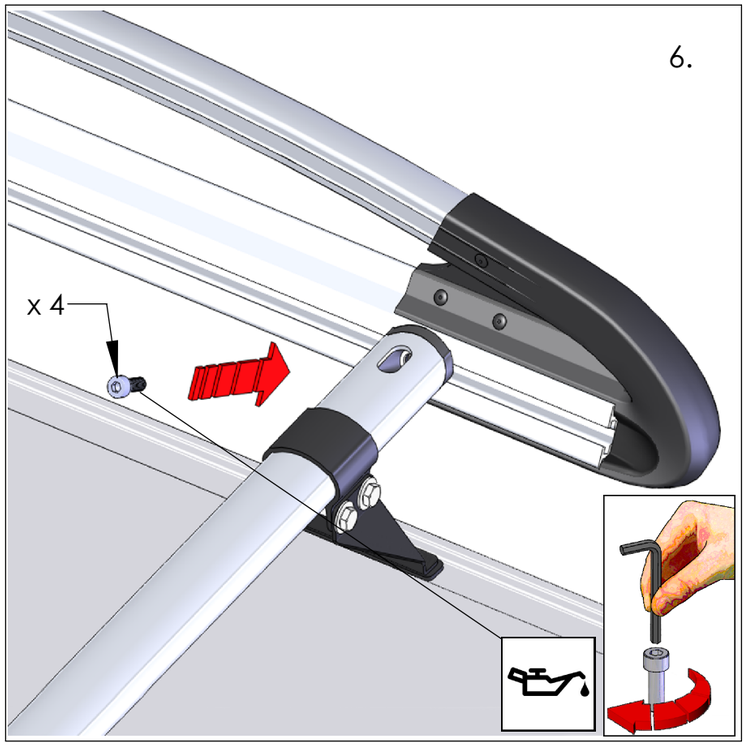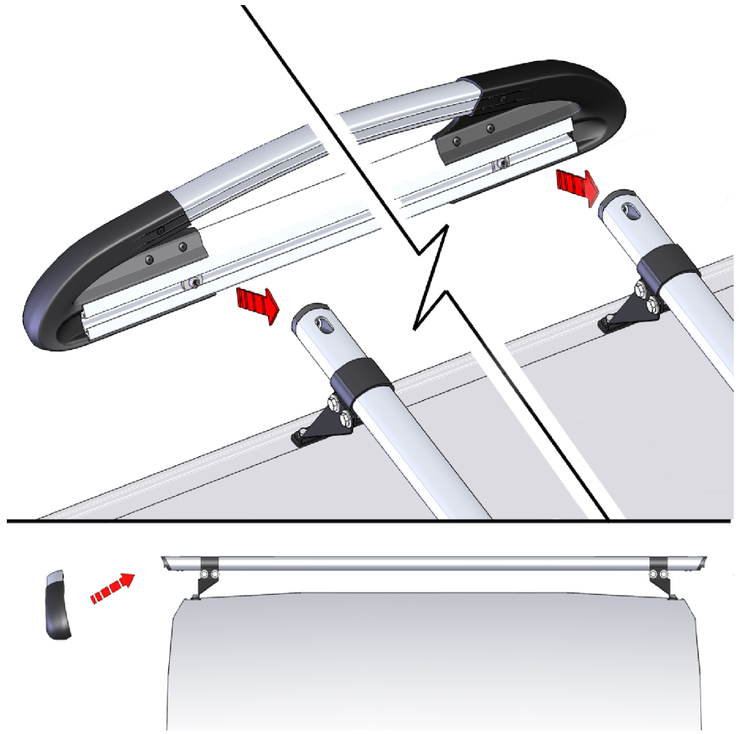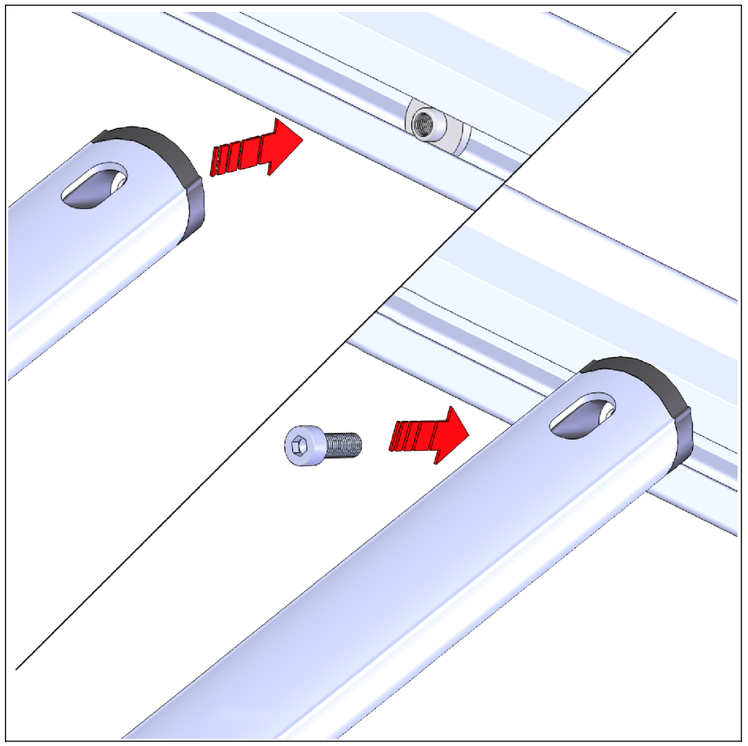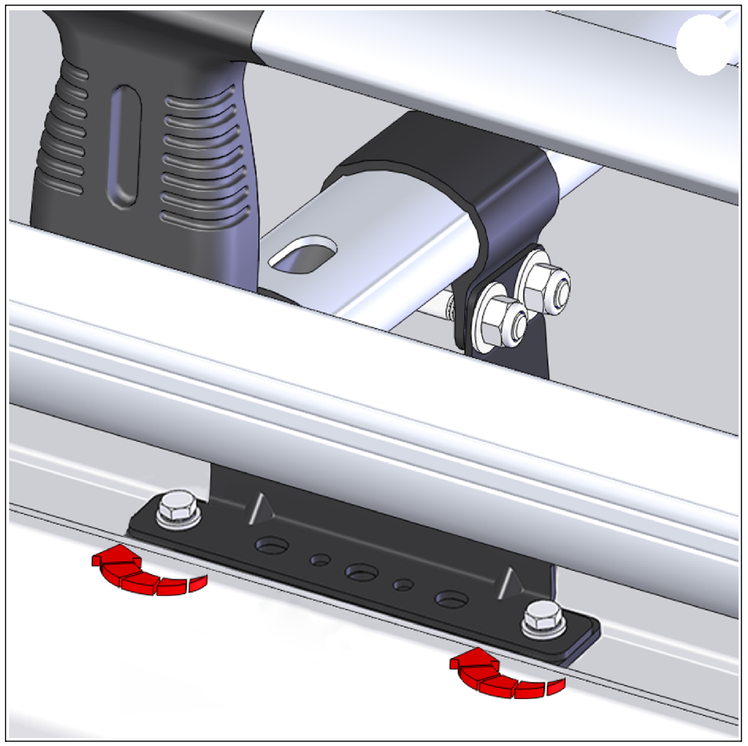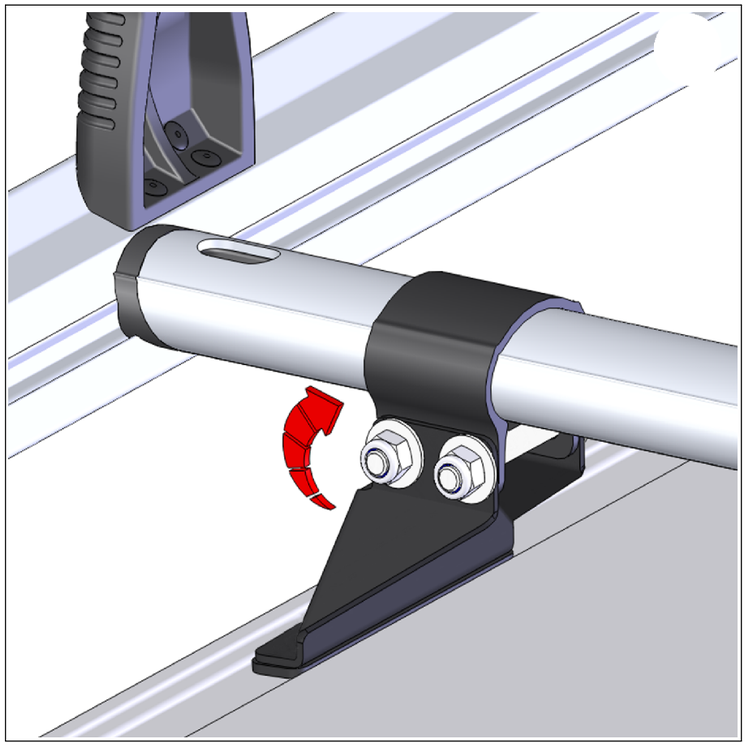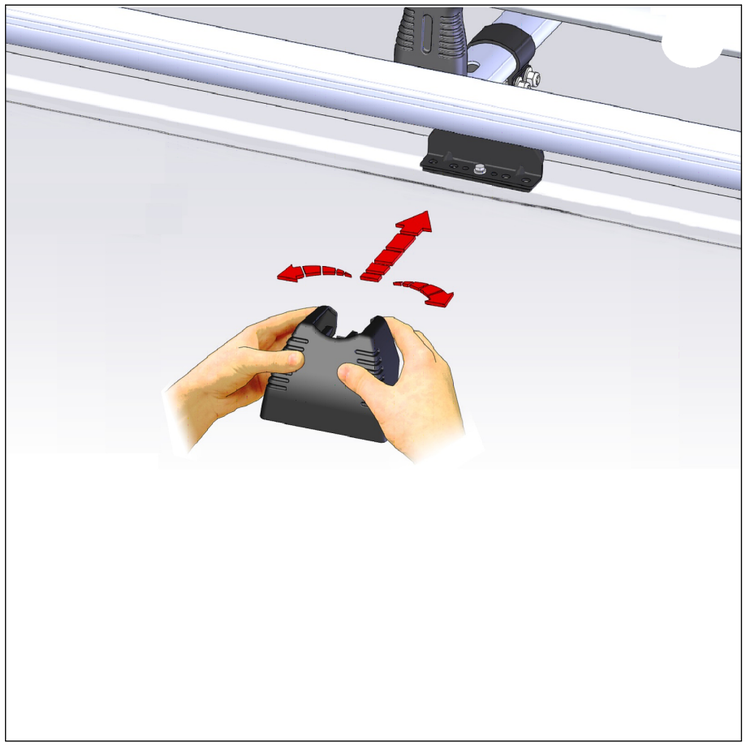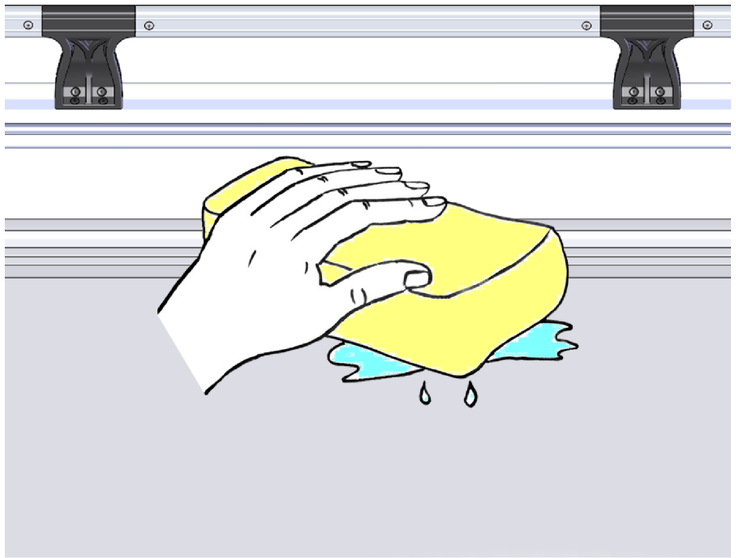
6.
x 4