A551

JUMPY/DISPATCH/SCUDO/EXPERT 2008-
L1, H1, TWIN DOORS

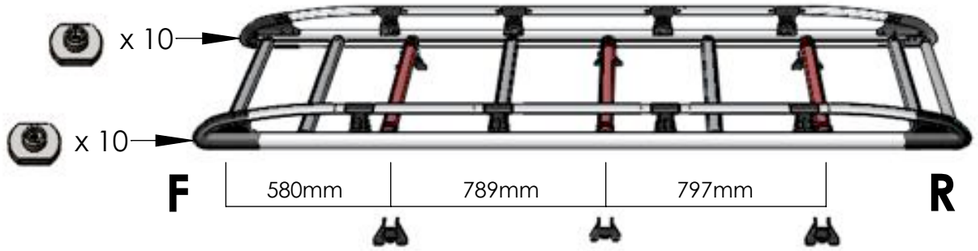

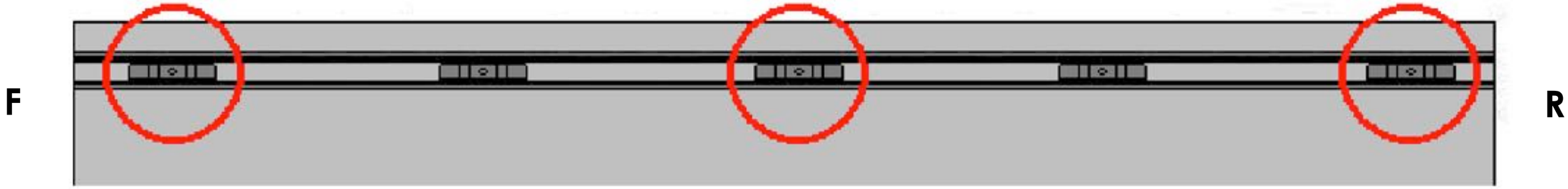

A552

JUMPY/DISPATCH/SCUDO/EXPERT 2008-
L1, H1, TAILGATE

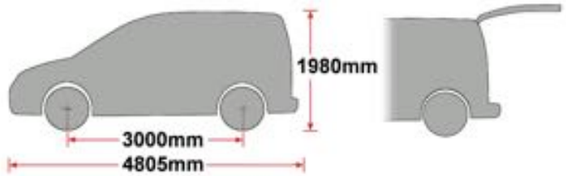

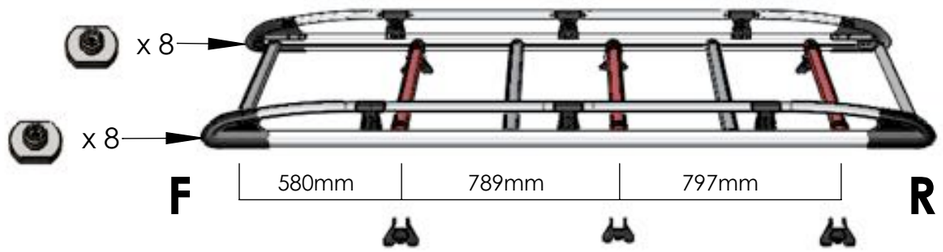

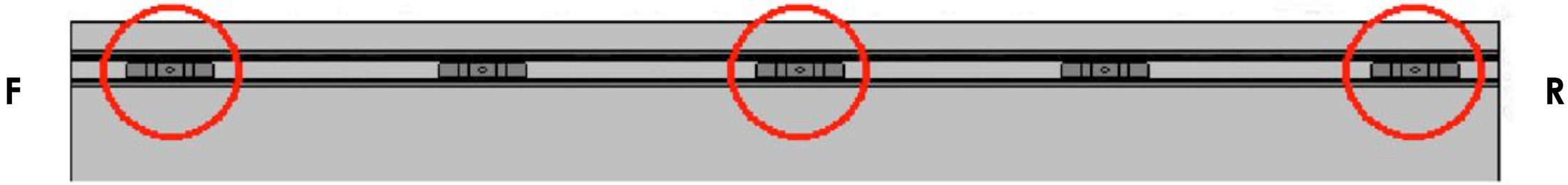

A553

JUMPY/DISPATCH/SCUDO/EXPERT 2008-

L2, H1, TWIN DOORS

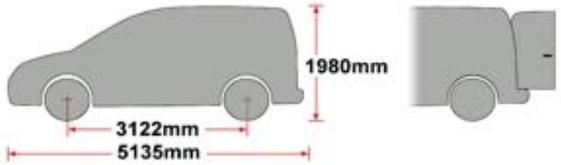

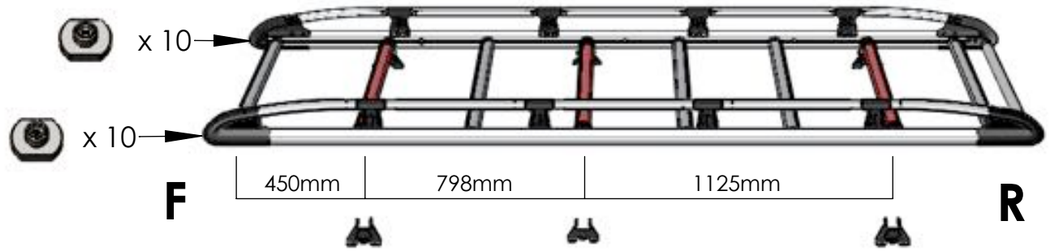

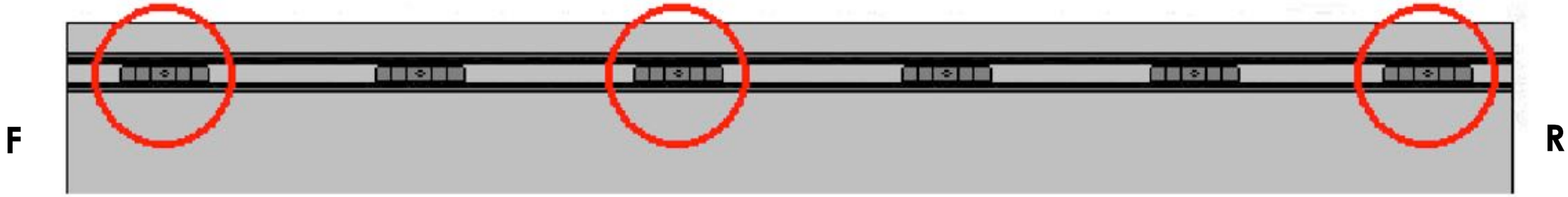

A554

JUMPY/DISPATCH/SCUDO/EXPERT 2008-

L2, H1, TAILGATE

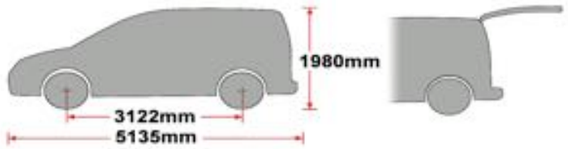

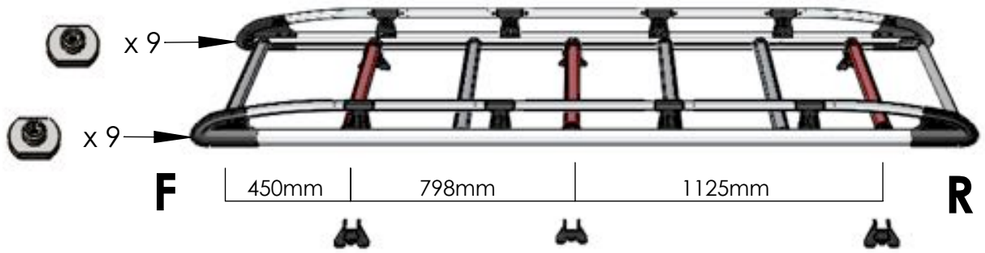

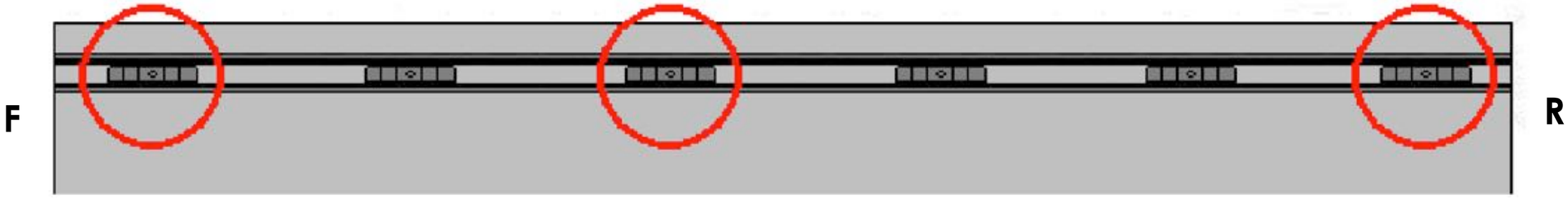

EXT09-004 x 6

PS023 x 6

PS090 x 1

PS089 x 1

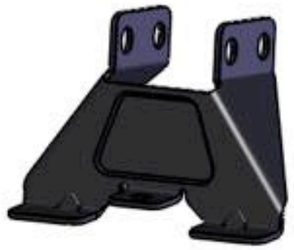

MS174 x 4

MS175 x 2

PS095 x 4

PS096 x 2

(1:1)

FB012 (M8 x 65) x 12

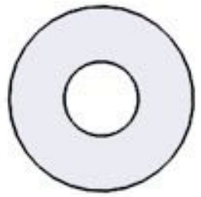

FW002 (M8) x 24

FN006 (M8) x 12

FS041 (M6 x 16) x 6

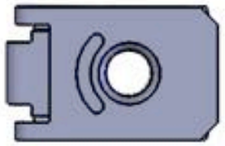

FN020 (M6) x 6

FW001 (M6) x 6

FW008 (M6) x 6

FS059 (M8 x 25) x 20

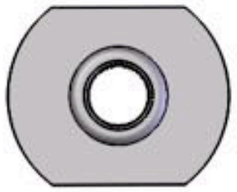

FN023 (M8) x 20

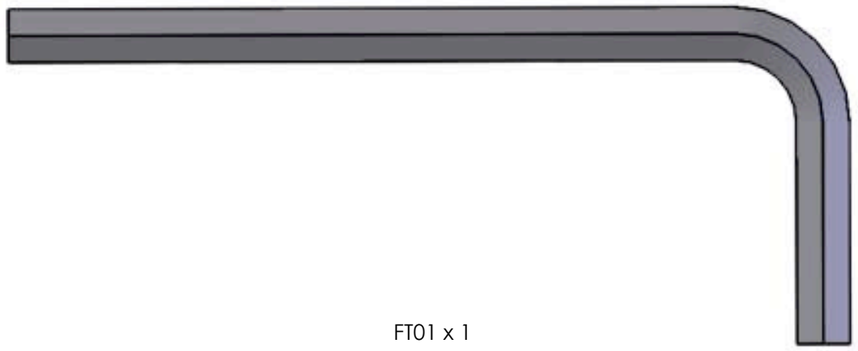

FT01 x 1

13mm x 2

10mm x 1

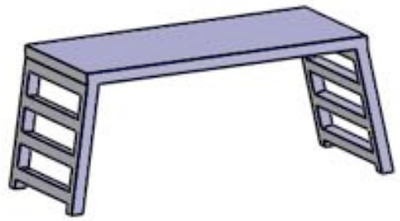

1.

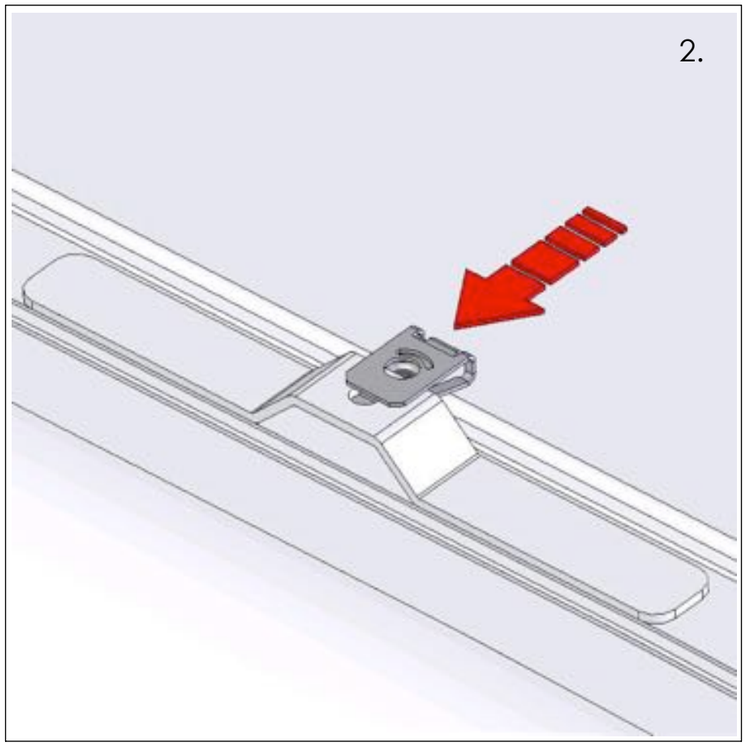
2.

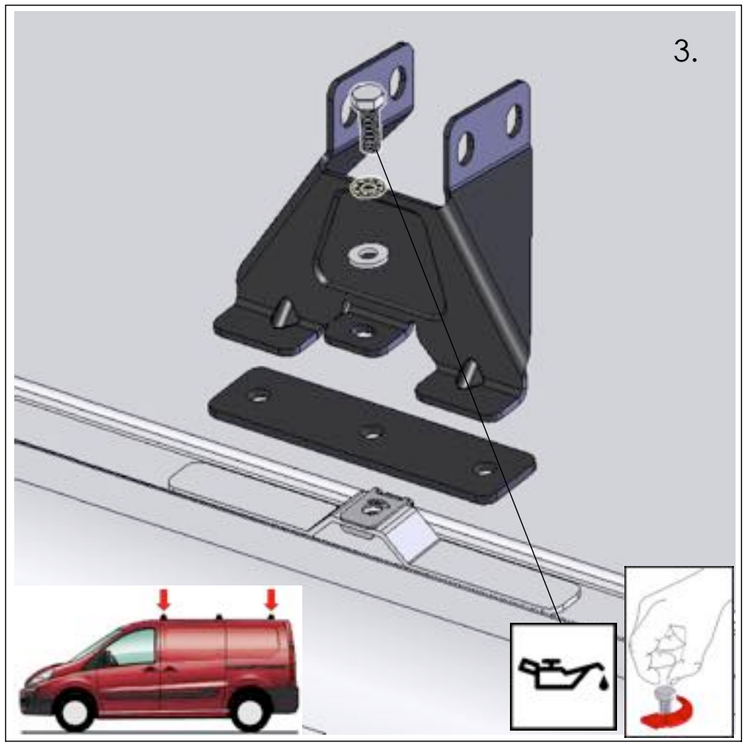
3.

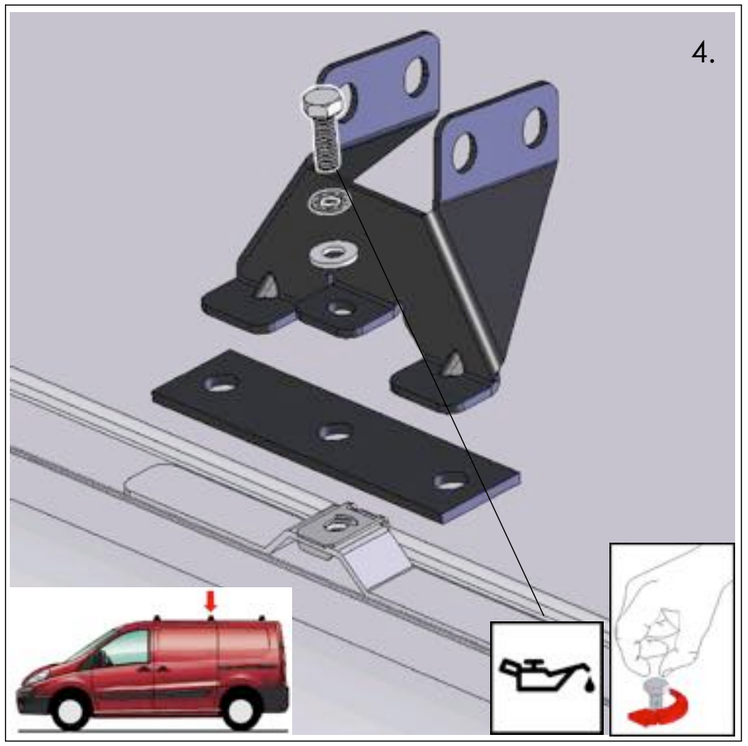
4.

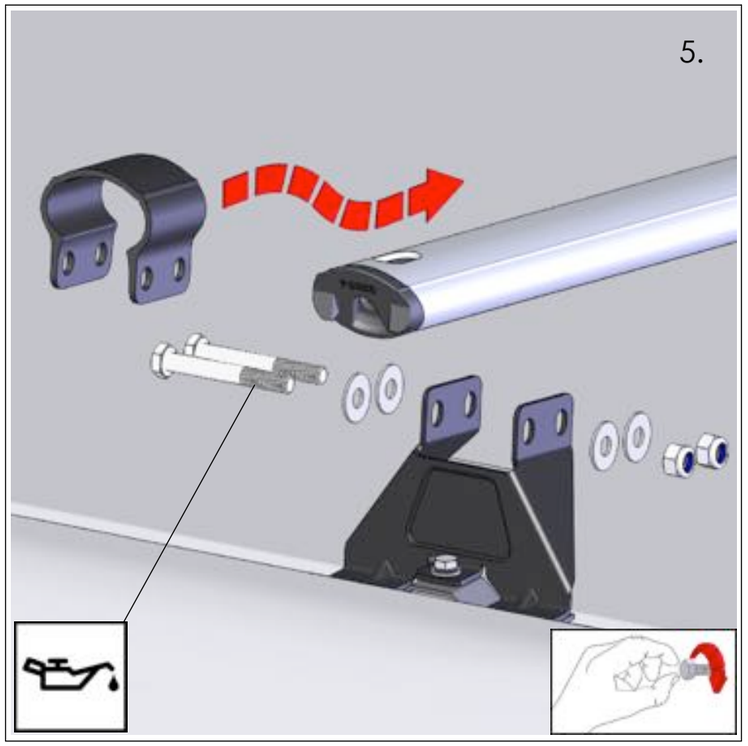
5.

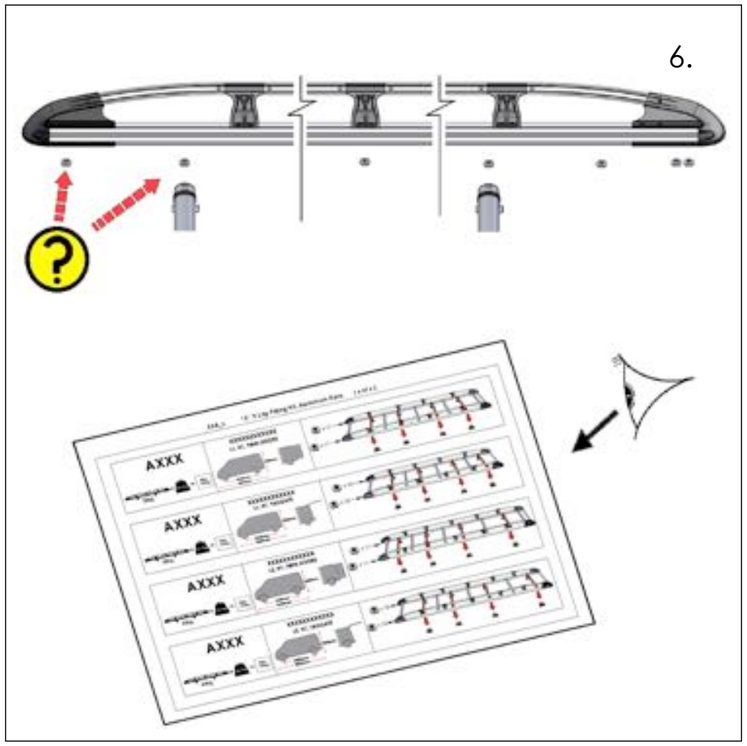
6.
AXXX
AXXX
AXXX
AXXX

7.

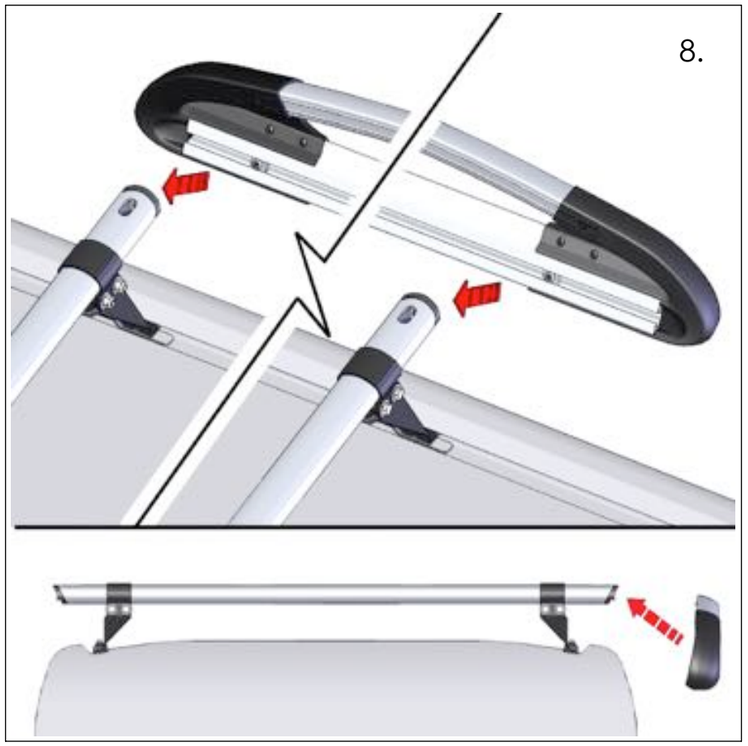
8.

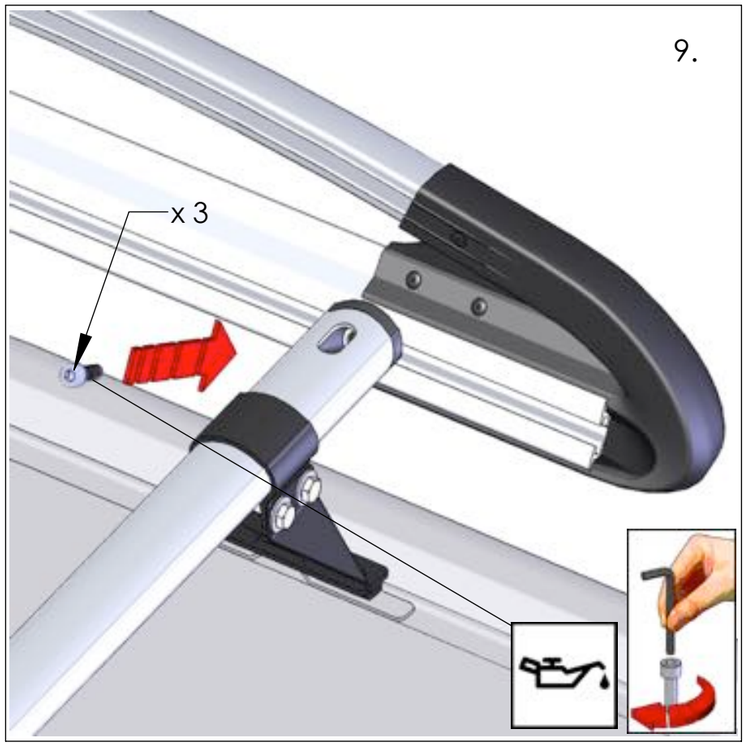
9.
x 3

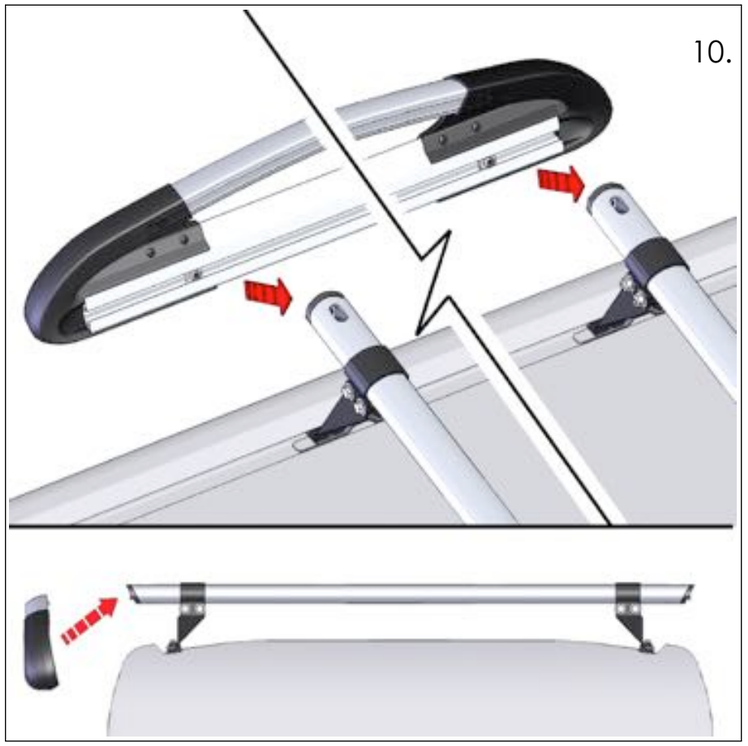
10.

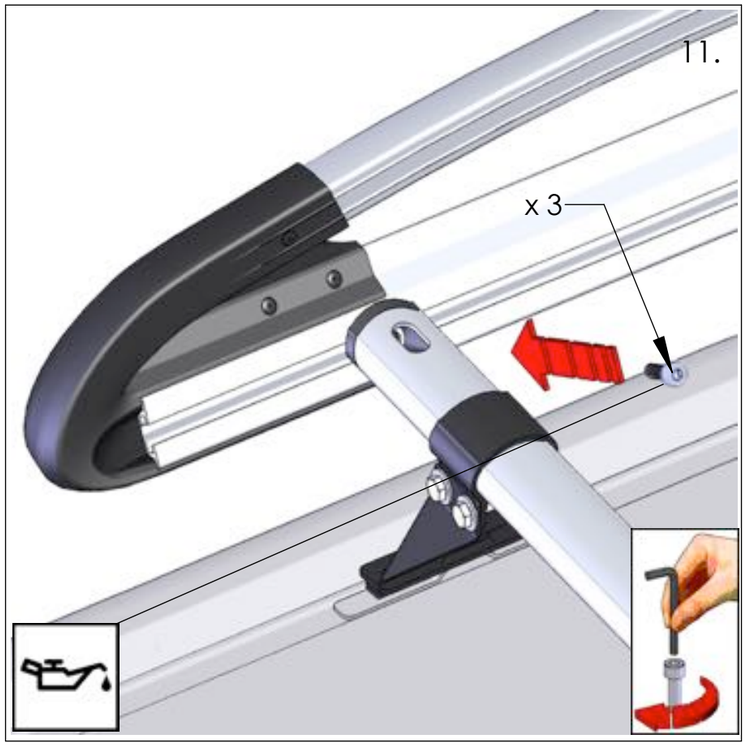
11.
x 3

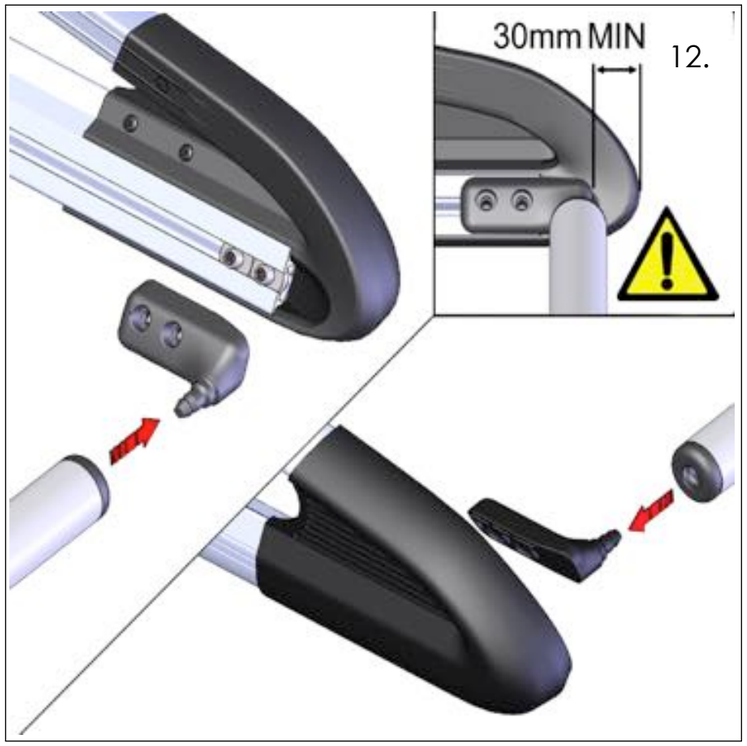
30mm MIN
12.

13.
x 4
≈10Nm

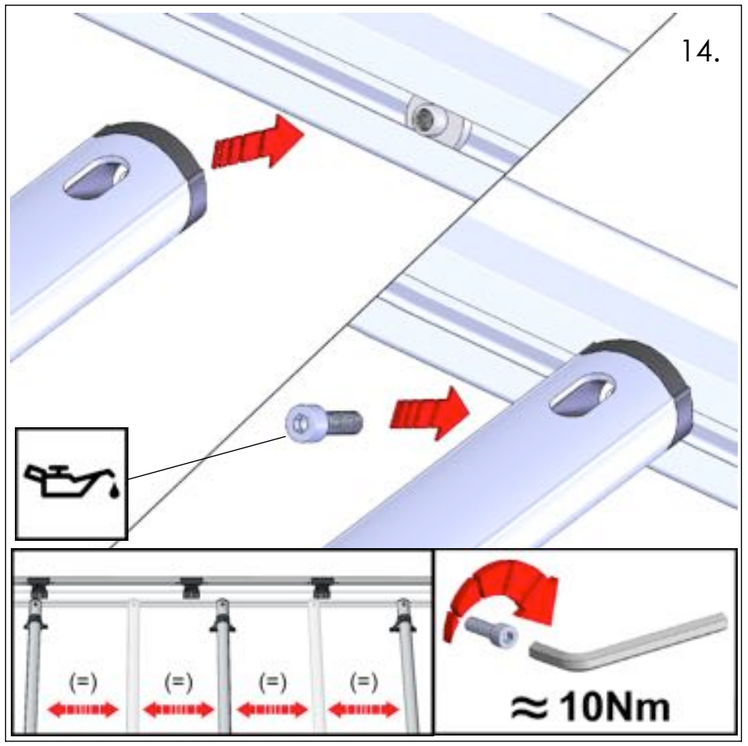
14.
(=)
(=)
(=)
(=)
≈10Nm

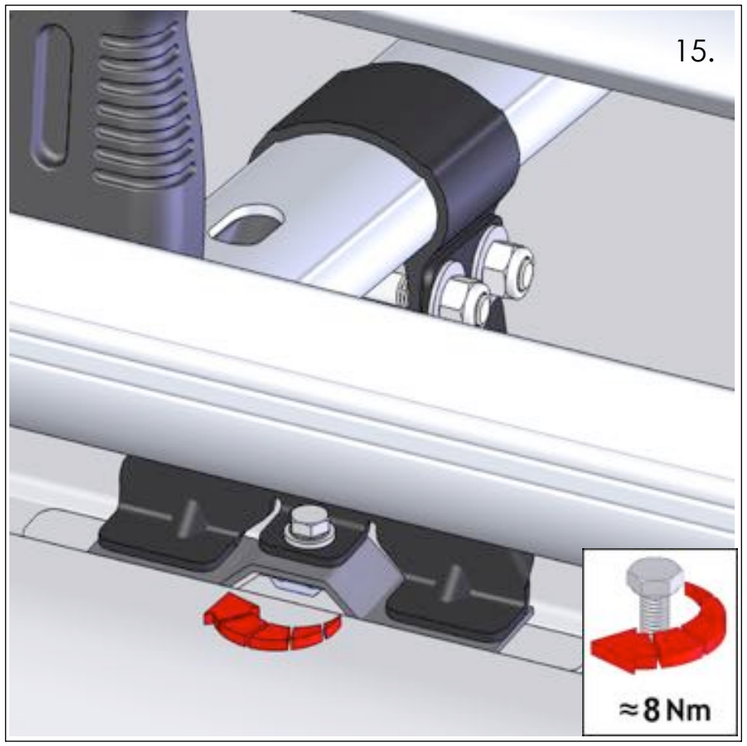
15.
≈8 Nm

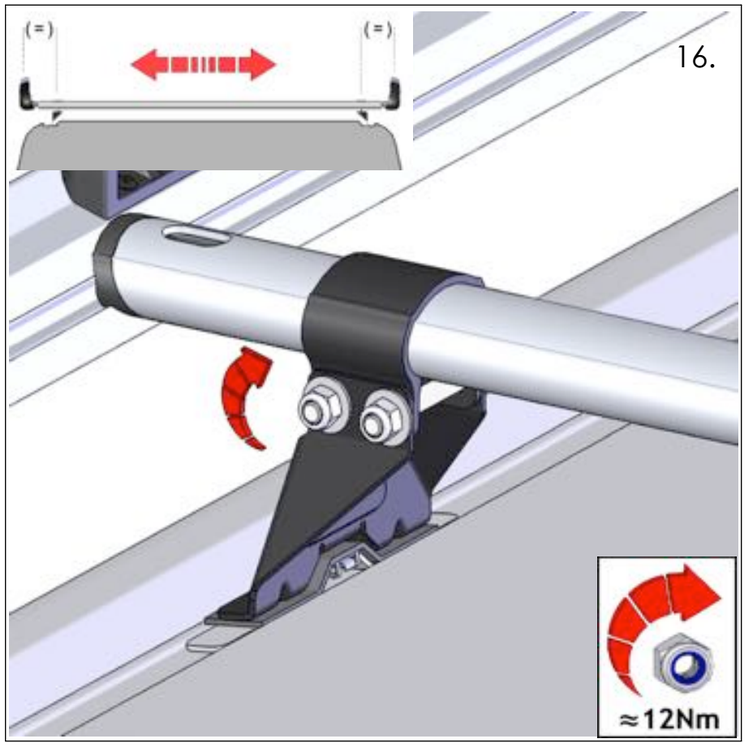
16.
(=)
(=)
≈12Nm

17.

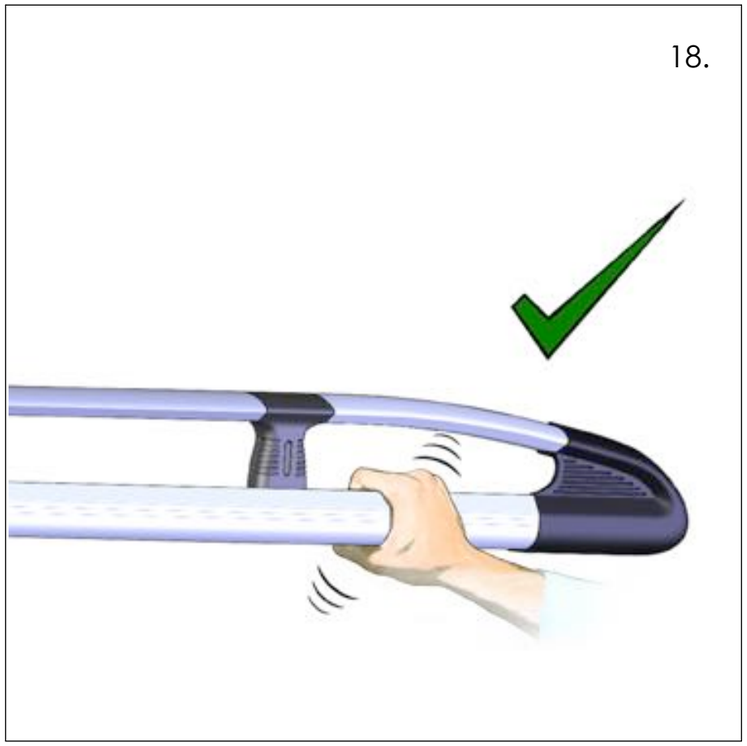
18.

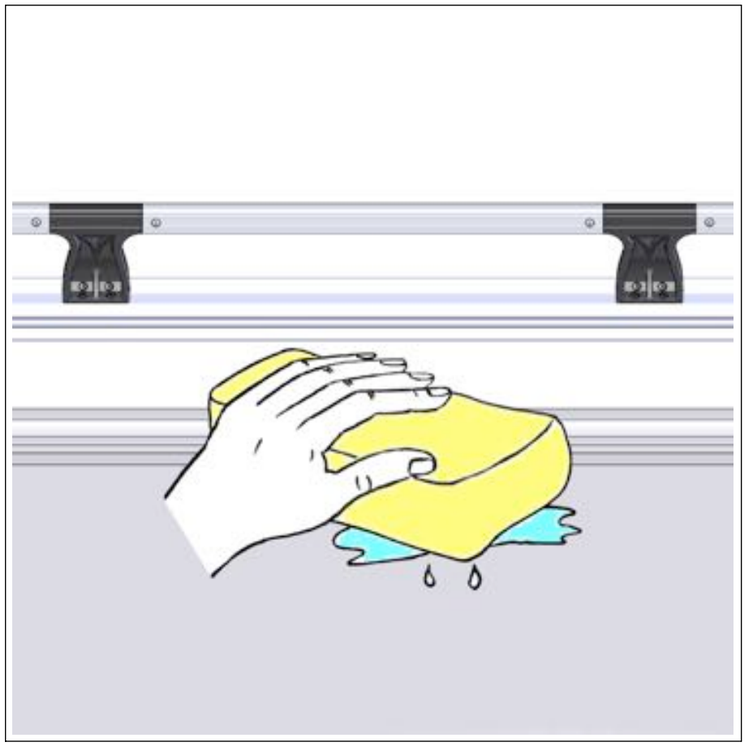

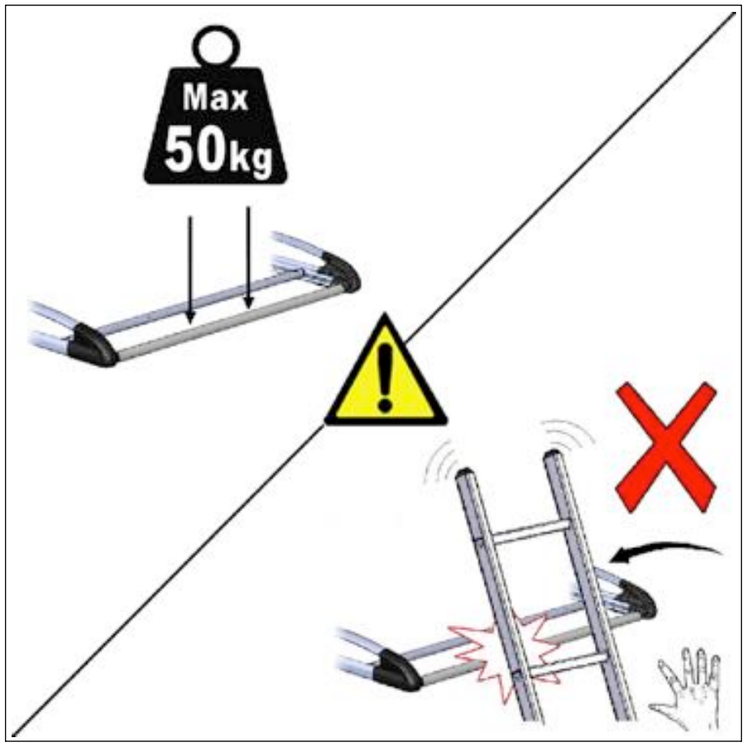
Max
50kg

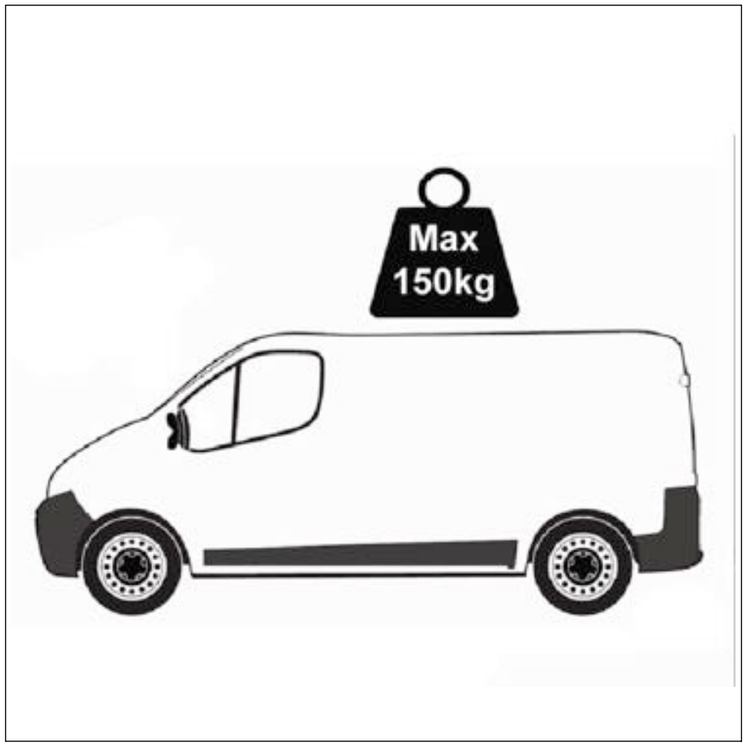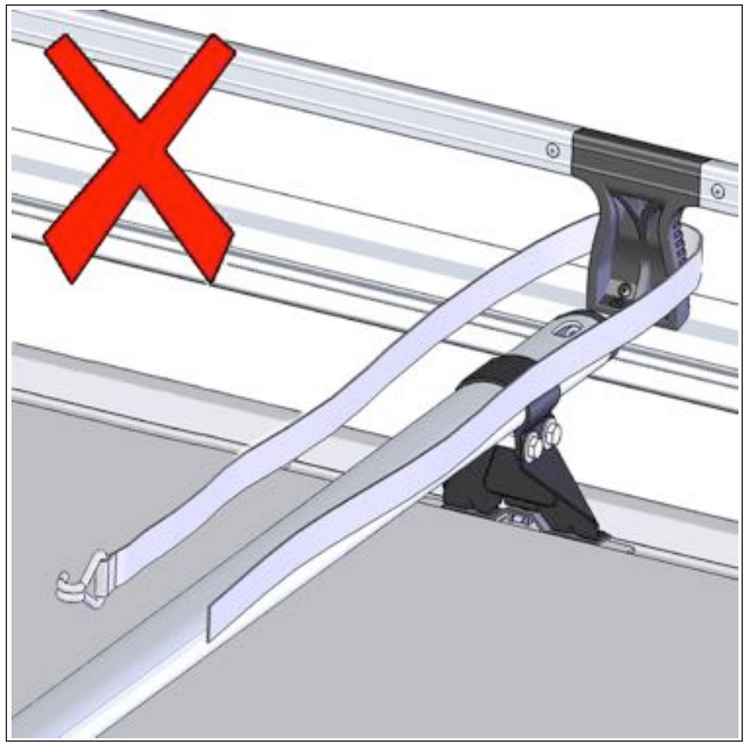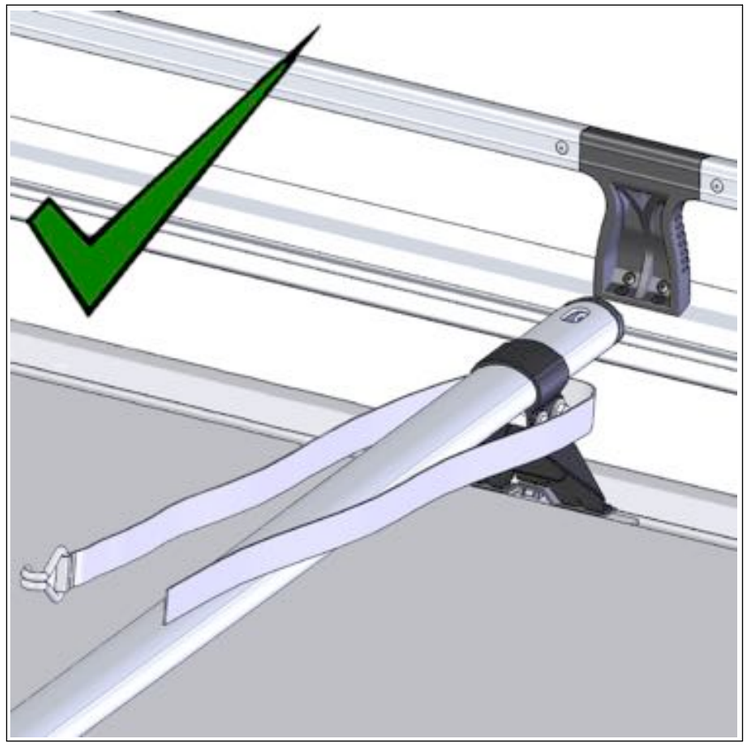
Max
150kg